M 0222255

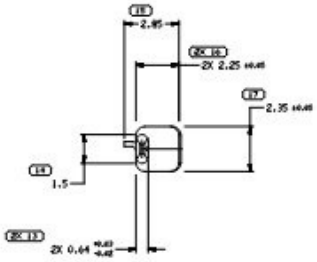

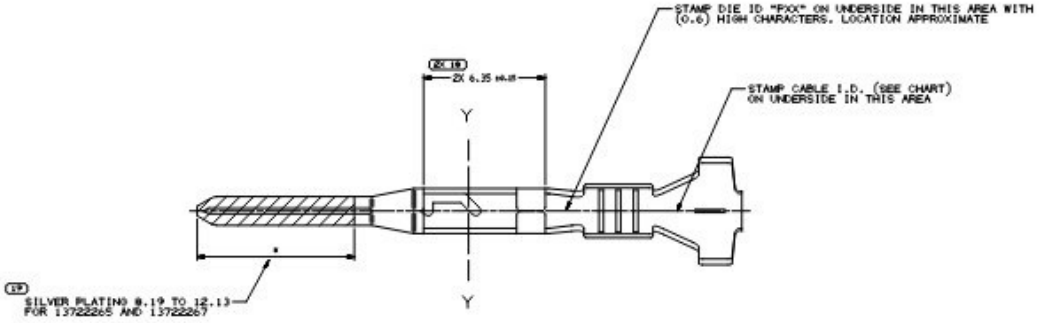

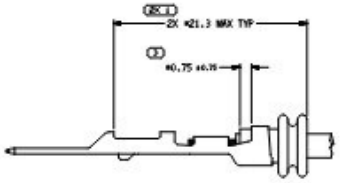

TWO RIB SEAL POSITION REF

SCALE 5:1

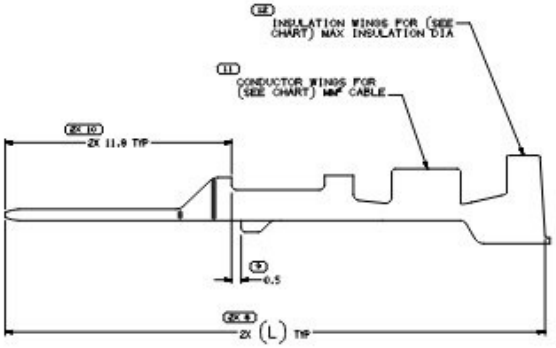

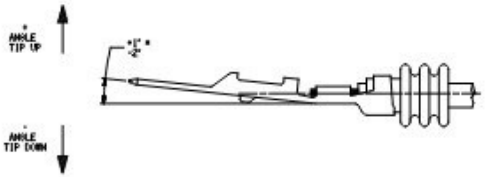

TERMINAL, SEAL AND CABLE ALIGNMENT
MEASURED FROM BOTTOM OF CORE CRIMP

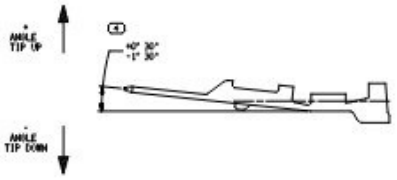

TERMINAL ALIGNMENT (TERMINAL MAKE)
MEASURED FROM BOTTOM OF CORE WING

SCALE 5:1

mes connettori
componenti per il cablaggio