M 1-1718646-1K

MINIKIT

Proseguire nella pagina successiva per visualizzare la scheda tecnica dei componenti

Revisione	Prodotto
REV.00 13/04/2026	OEM

© 2024 TE Connectivity. All Rights Reserved.

PRINT: 1

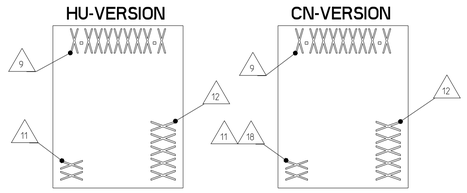

RETAINER IN END POSITION

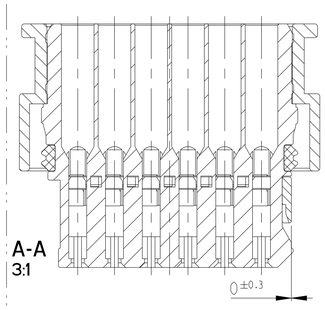

CPA IN END POSITION

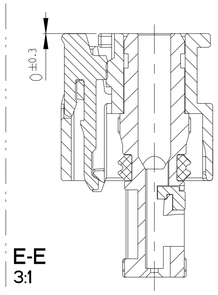

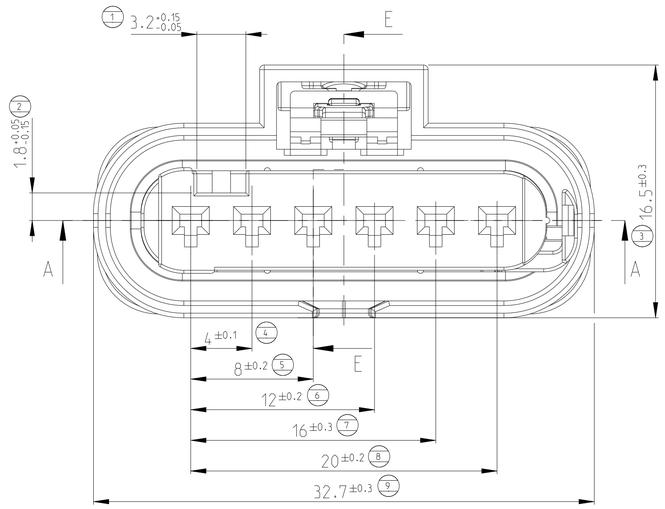

A-A

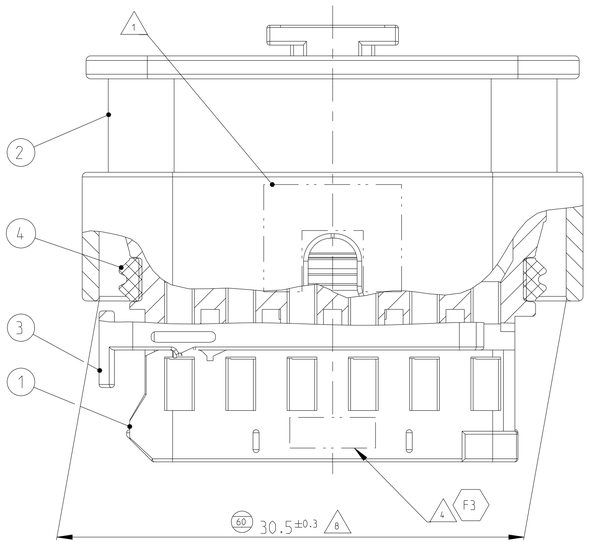

E-E

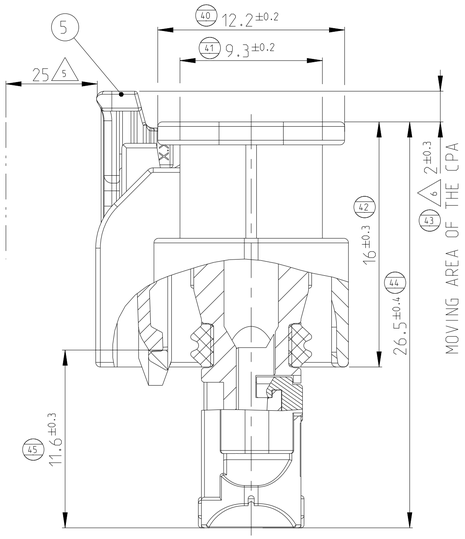

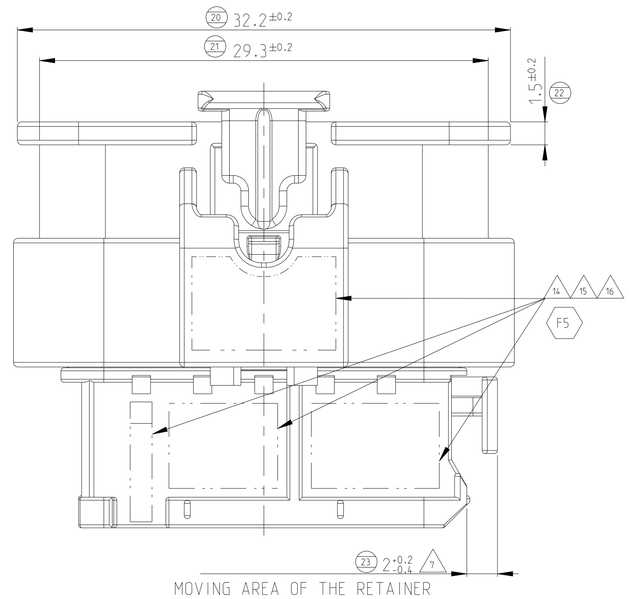

REVISIONS					
P	LTR	DESCRIPTION	DATE	DWN	APVD
	F3	DIVERGENT MARKING ADDED	25NOV2019	JPN	LSZ
	F4	LASER-PRINT UPDATED WITH CN VERSION	21JAN2020	SZN	LSZ
	F5	1-1718646-6 NEW VERSION ADDED	28OCT2024	SZN	LSZ
	F6	CONTACT CAVITY VIEW ADDED	27MAR2025	SZN	LSZ

CODINGS
M 2:1

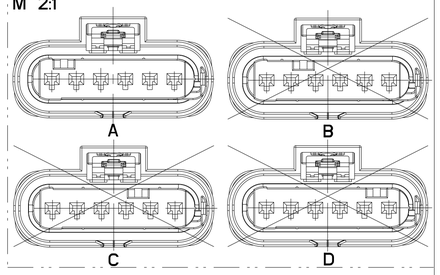

1 AREA FOR PRINT

2 USABLE CONTACTS MCON 1.2 LL
SEE TE-NO. 1452674. SINGLE WIRE SYSTEM

3 MAX. WIRE SIZE RANGE 1.5 mm² FLR PERMITTED
FOR CAVITY-Ø 3.55MM
SEE WIRE HARNESS DRAWING FOR PERMISSIBLE
CURRENT CARRYING CAPACITY OF THE SINGLE CONTACT
SEE PRODUCT SPECIFICATION NO.108-18782

4 SUPPLIER-MARK

5 SPACE OF ACTIVITY

6 SUPPLY CONDITION: CPA IN PRELOCKED POSITION

7 SUPPLY CONDITION: RETAINER IN PRELOCKED POSITION

8 WARPAGE PERMITTED TO MAX. -0.5mm

9 TE ORDER-NO.

10 ACCORDING TO INTERFACE DRAWING
SEE TE-NO. 114-18679-3

11 ASSEMBLY LINE SEGMENT IDENTIFICATION

12 DATE CODE (DDDYY)

13 CIRCUALR DATE INSERT ONLY FOR VERSION 1
DATE FORMAT FOR VERSION 2 (YY/MM)

14 REVISION, CORRESPONDING TO ACTUAL REVISION

15 MATERIAL IDENTIFICATION

16 MOULD CAVITY IDENTIFICATION

17 DATE INSERT FOR RECEPTACLE HOUSING

18 DIVERGETN MARKING FOR PARTS FROM U.S. AND
CHINA PRODUCTION

-

1- -1 AS SHOWN

VERSION CAVITY 6 CLOSED
1-1718646-4

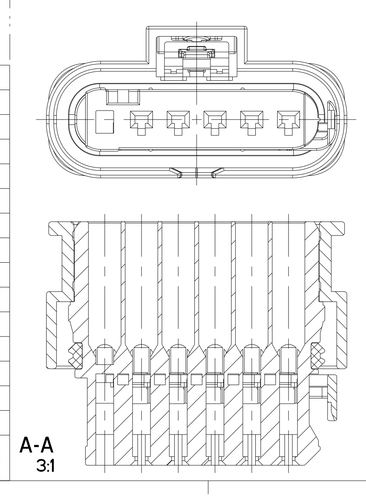

VERSION CAVITY 5 AND 6 CLOSED
1-1718646-6

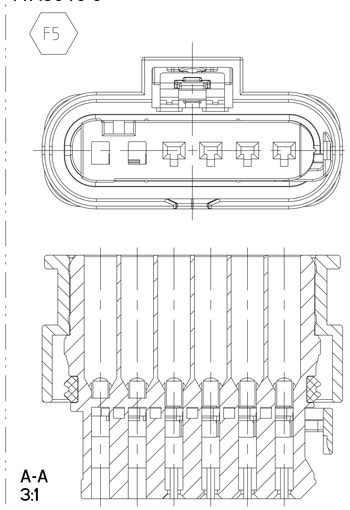

3D VIEW
3:1

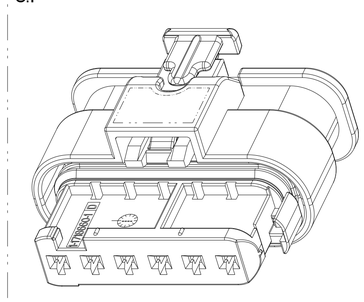

CONTACT CAVITY MARKING
3:1

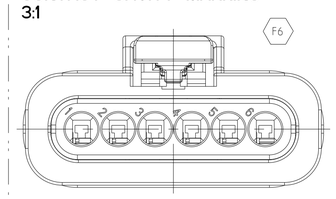

TE-ORDER-NO. 9	COD	DESCRIPTION	REV	QTY	DESCRIPTION	MATERIAL	SURFACE/COLOUR	ITEM
F5 1-1718646-6	A	6pos. MCON 1.2 - LL Connector, Sealed	F	1	MCON 1.2 - CPA	PA46-GF15	GRAY SIML. RAL 7037	5
				1	6pos. MCON 1.2 - Seal	MVQ	NATURE	4
				1	6pos. MCON 1.2 - Retainer	PA66-GF15	VIOLETT SIML. RAL 4006	3
				1	6pos. MCON 1.2 - Protec. Cover	PA6-GF15	BLACK SIML. RAL 9011	2
			14	1	6pos. MCON 1.2 - Rec. Hsg.	PA66-GF30	BLACK SIML. RAL 9011	1
1-1718646-4	A	6pos. MCON 1.2 - LL Connector, Sealed	D	1	MCON 1.2 - CPA	PA46-GF15	GRAY SIML. RAL 7037	5
				1	6pos. MCON 1.2 - Seal	MVQ	NATURE	4
				1	6pos. MCON 1.2 - Retainer	PA66-GF15	VIOLETT SIML. RAL 4006	3
				1	6pos. MCON 1.2 - Protec. Cover	PA6-GF15	BLACK SIML. RAL 9011	2
			14	1	6pos. MCON 1.2 - Rec. Hsg.	PA66-GF30	BLACK SIM. RAL 9011	1
1-1718646-1	A	6pos. MCON 1.2 - LL Connector, Sealed	F	1	MCON 1.2 - CPA	PA46-GF15	GRAY SIML. RAL 7037	5
				1	6pos. MCON 1.2 - Seal	MVQ	NATURE	4
				1	6pos. MCON 1.2 - Retainer	PA66-GF15	VIOLETT SIML. RAL 4006	3
				1	6pos. MCON 1.2 - Protec. Cover	PA6-GF15	BLACK SIML. RAL 9011	2
			14	1	6pos. MCON 1.2 - Rec. Hsg.	PA66-GF30	BLACK SIML. RAL 9011	1

4805 (3/13)

TOLERANCES UNLESS OTHERWISE SPECIFIED ACC. TO DIN 16901-140 CENTRIC TO NOMINAL DIMENSION. EDITION 1982-11 SHALL APPLY.
Freimasstolerenzen nach DIN 16901-140. Es gilt die Ausgabe 1982-11.

THIS DRAWING IS A CONTROLLED DOCUMENT.

DIMENSIONS: mm

TOLERANCES UNLESS OTHERWISE SPECIFIED
0 PLC ±
1 PLC ±
2 PLC ±
3 PLC ±
4 PLC ±
ANGLES ±2°

MATERIAL -
FINISH -

DWN	G. Roth	17FEB2005
CHK	A. Schroebel	17FEB2005
APVD	J. Woller	-
PRODUCT SPEC	108-18969	
APPLICATION SPEC	114-18861	
WEIGHT	6.4 g	

TE Connectivity

NAME 6poos, MCON 1.2 - LL Connector, Sealed

SIZE	CAGE CODE	DRAWING NO	RESTRICTED TO
A1	00779	C-1718646	-

CUSTOMER DRAWING | SCALE 5:1 | SHEET 1 OF 1 | REV F6

THIS DRAWING IS UNPUBLISHED. RELEASED FOR PUBLICATION 99
© COPYRIGHT 2000 - ALL RIGHTS RESERVED.

Project No.	LOC	DIST
PRJ-11-0000001417	A1	-

REVISIONS

P	LTR	DESCRIPTION	DATE	DWN	APVD
	C4	PN 2141861 and 21419 70 active ECR-14-001724	06FEB2014	Abr	Raab
	C5	ECR-14-008680 CANCELED	12JUN2014	Abr	Raab
	C6	Name Changed to MCON 1.2 LL ECR-14-012725	25AUG2014	Abr	Raab
	C7	See PCN E-17-018644	21DEC2017	FRAN	KURF

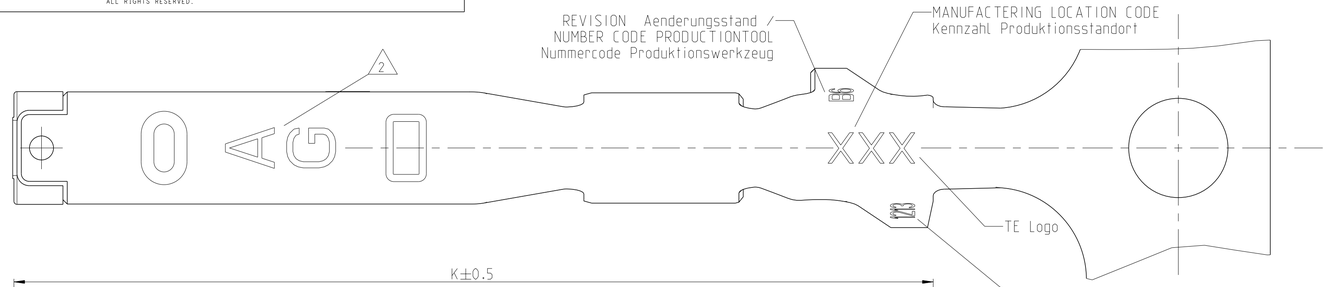

STANDARD APPLICATION
Standard Anwendung

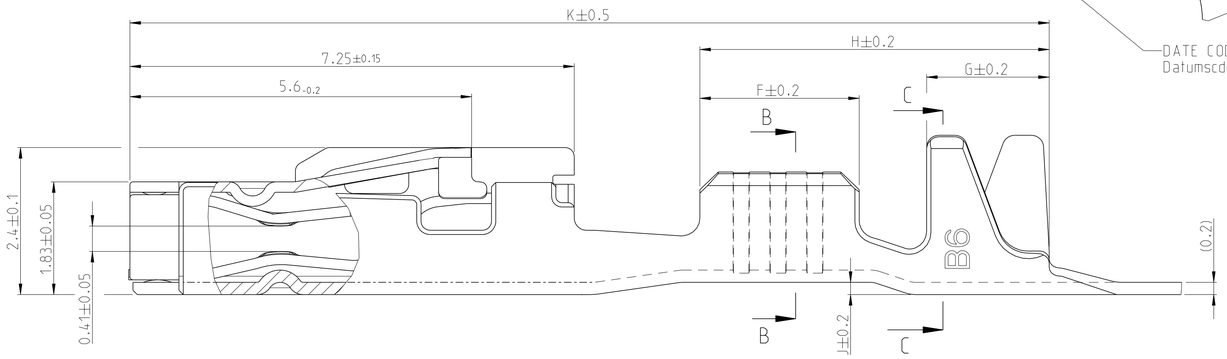

B-B

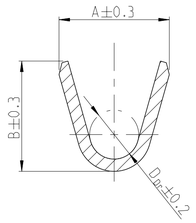

C-C

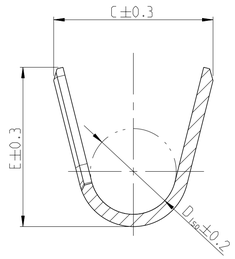

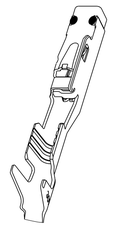

5:1

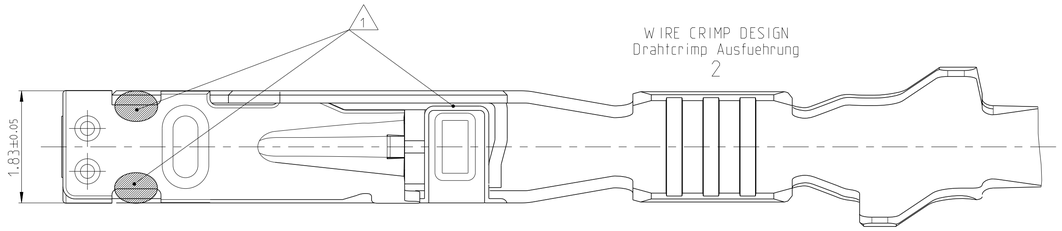

WIRE CRIMP DESIGN
Drahtcrimp Ausfuehrung
2

WIRE CRIMP DESIGN
Drahtcrimp Ausfuehrung
1

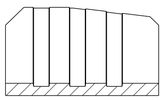

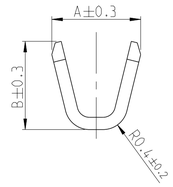

WIRE CRIMP DESIGN
Drahtcrimp Ausfuehrung
3

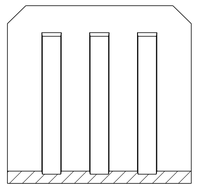

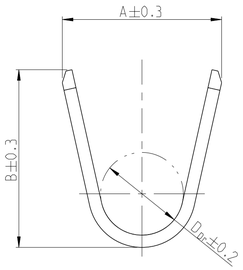

SINGLE WIRE SEALING SYSTEM
Einzelleiterdichtungssystem

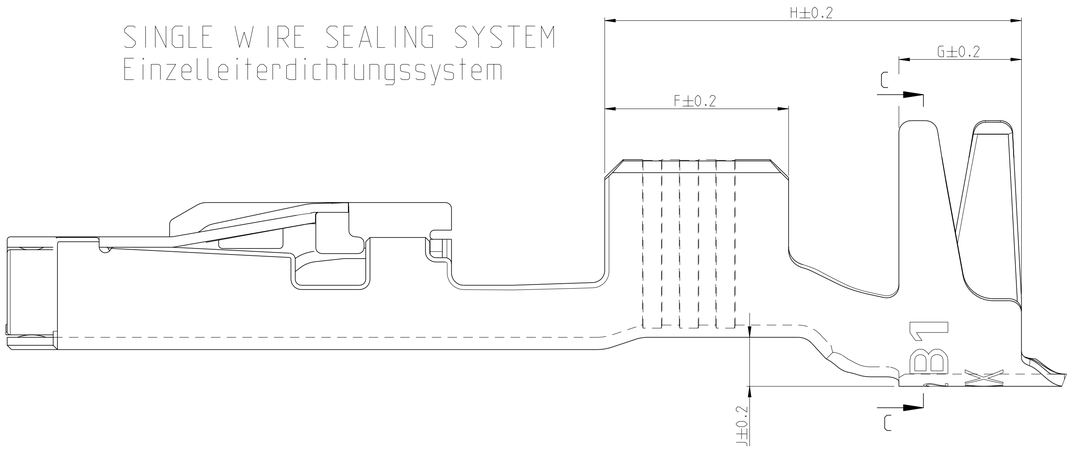

C-C

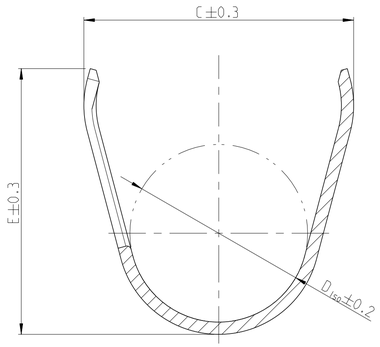

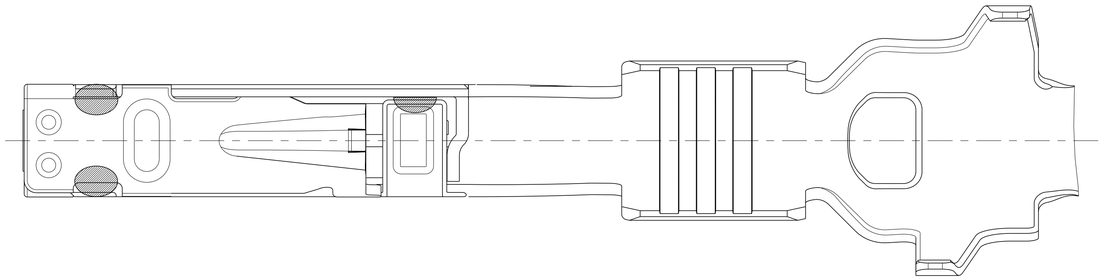

NOTES
Bemerkungen

1 LASER WELDED
Lasergeschweisst

2 STAMPED INDICATOR FOR PLATING:
- AU GOLD PLATING
- AG SILVER PLATING
- TIN PLATING WITHOUT INDICATOR

Markierung fuer galvanische Ausfuehrung:
- AU vergoldet}
- AG versilbert
- verzinnt: ohne Markierung

3 TO BE USED ON TAB
1.2±0.1 x 0.6±0.03 MM
geeignet fuer Flachstecker
1.2±0.1 x 0.6±0.03 mm

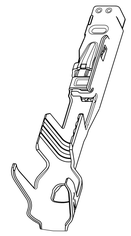

5:1

THIS DRAWING IS A CONTROLLED DOCUMENT.

DIMENSIONS: mm

TOLERANCES UNLESS OTHERWISE SPECIFIED: 0 PLC ±; 1 PLC ±; 2 PLC ±; 3 PLC ±; 4 PLC ±; ±0.2; ANGLES ±1°

MATERIAL -

FINISH -

DWN	E. Horn	11NOV2011
CHK	R. Meier	11NOV2011
APVD	V. Seipel	11NOV2011
PRODUCT SPEC	108-18782	
APPLICATION SPEC	114-18464	
WEIGHT	0.18 g	

TE Connectivity

NAME MCON 1.2 LL (LOCKING-LANCE)

SIZE	CAGE CODE	DRAWING NO	RESTRICTED TO
A1	00779	C-1452674	-

Customer Drawing | SCALE 20:1 | SHEET 1 OF 2 | REV C7

4805 (3/11)

THIS DRAWING IS UNPUBLISHED. RELEASED FOR PUBLICATION 99
© COPYRIGHT 2000 - ALL RIGHTS RESERVED.

LOC	DIST
A1	-

REVISIONS

P	LTR	DESCRIPTION	DATE	DWN	APVD
	-	SEE SHEET 1	-	-	-

C7

VERSION / Ausfuehrung	ORDER-NO. STRIP FORM Bestell-Nr. Bandware	REV.	RANGE Bereich (WIRE-SIZE RANGE INSULATION DIAMETER Leitergerschnitt Isolationsdurchmesser)	INSULATION-Ø Isolations-Ø [mm]	AWG	mm²	BODY Kontakt-koerper (MATERIAL Werkstoff)	SPRING Kontakt-feder (MATERIAL Werkstoff)	BODY Kontakt-koerper (SURFACE Oberflaeche)	SPRING Kontakt-feder (SURFACE Oberflaeche)	DESIGN WIRE-CRIMP Ausfuehrung Draht-Crimp	A (STRIP FORM/Bandware)	B (STRIP FORM/Bandware)	D_{Dr} (STRIP FORM/Bandware)	C (STRIP FORM/Bandware)	E (STRIP FORM/Bandware)	D_{ISO} (STRIP FORM/Bandware)	F	G	H	J	K	SINGLE WIRE SEAL FOR CAVITY DIAMETER Einzeldichtung fuer Kammerdurchmesser TE NO.	BLINDPLUG ORDER NO. Blindstopfen Bestell-Nr.	APPLICATION TOOLS Verarbeitungswerkzeuge
SINGLE WIRE SEAL/ Einzeldichtung	2141970-3	A	0.13-0.22 (9)	0.95-1.2	-	0.13	CuSn4	CuNiSi	(8)	(7)	1	1.5	1.4	-	4.0	3.9	2.6	2.5	1.9	6.2	0.6	16	SEE APPLICATION SPEC. 114-18464 siehe Verarbeitungsspez. 114-18464		
	2141970-2	A			-	0.17				(6)															
	2141970-1	A			-	0.22				(5)															
	7-1452665-3	A	0.25-0.35	1.1-1.75	-	0.25				(7)	2	1.8	1.8	0.8	4.2	4.3	2.6	2.6	2.0	6.4	0.8	16			
	7-1452665-2	A			24	-				(6)															
	7-1452665-1	A			-	0.35				(5)															
					22	-																			
	7-1452668-3	A	0.5-0.75	1.4-1.9	20	0.5				(7)	2	2.0	2.1	1.1	4.2	4.3	2.7	2.6	2.0	6.4	0.8	16			
	7-1452668-2	A			-	0.75				(6)															
	7-1452668-1	A								(5)															
	7-1452671-3	A	1-1.5	1.9-2.4	18	-				(7)	2	2.6	2.9	1.35	4.4	4.3	2.9	3.0	2.0	6.8	0.8	16.55			
	7-1452671-2	A			-	1				(6)															
	7-1452671-1	A			16	-				(5)															
					-	1.5																			
STANDARD APPLICATION Standardanwendung	2141861-3	A	0.13-0.22 (9)	0.95-1.2	-	0.13				(7)	1	1.5	1.4	-	2.0	1.9	1.1	2.5	1.7	5.4	0	15			
	2141861-2	A			-	0.17				(6)															
	2141861-1	A			-	0.22				(5)															
	7-1452653-3	A	0.25-0.35	1.1-1.75	-	0.25				(7)	2	1.8	1.8	0.8	2.6	2.6	1.4	2.6	2.0	5.7	0.2	15			
	7-1452653-2	A			24	-				(6)															
	7-1452653-1	A			-	0.35				(5)															
					22	-																			
	7-1452656-3	A	0.5-0.75	1.4-1.9	20	0.5				(7)	2	2.0	2.1	1.1	2.7	2.9	1.6	3.0	2.0	6.1	0.2	16			
	7-1452656-2	A			-	0.75				(6)															
	7-1452656-1	A								(5)															
	7-1452659-3	A	1-1.5	1.9-2.4	18	-				(7)	2	2.6	2.9	1.35	3.7	3.9	2.1	3.0	2.0	6.1	0.2	16			
	7-1452659-2	A			-	1				(6)															
	7-1452659-1	A			16	-				(5)															
					-	1.5																			

7- VARIANTS FOR **NEW** APPLICATIONS (C7)

VERSION / Ausfuehrung	ORDER-NO. STRIP FORM Bestell-Nr. Bandware	REV.	RANGE Bereich (WIRE-SIZE RANGE INSULATION DIAMETER Leitergerschnitt Isolationsdurchmesser) (4)	INSULATION-Ø Isolations-Ø [mm]	AWG	mm²	BODY Kontakt-koerper (MATERIAL Werkstoff)	SPRING Kontakt-feder (MATERIAL Werkstoff)	BODY Kontakt-koerper (SURFACE Oberflaeche)	SPRING Kontakt-feder (SURFACE Oberflaeche)	DESIGN WIRE-CRIMP Ausfuehrung Draht-Crimp	A (STRIP FORM/Bandware)	B (STRIP FORM/Bandware)	D_{Dr} (STRIP FORM/Bandware)	C (STRIP FORM/Bandware)	E (STRIP FORM/Bandware)	D_{ISO} (STRIP FORM/Bandware)	F	G	H	J	K	SINGLE WIRE SEAL FOR CAVITY DIAMETER Einzeldichtung fuer Kammerdurchmesser TE NO.	BLINDPLUG ORDER NO. Blindstopfen Bestell-Nr.	APPLICATION TOOLS Verarbeitungswerkzeuge
SINGLE WIRE SEAL/ Einzeldichtung	0-1452665-3	B	0.25-0.35	1.1-1.75	-	0.25	CuSn0.15/0.2	CuNiSi	(5)	(7)	2	1.8	1.8	0.8	4.2	4.3	2.6	2.6	2.0	6.4	0.8	16	SEE APPLICATION SPEC. 114-18464 siehe Verarbeitungsspez. 114-18464		
	0-1452665-2	B			24	-				(6)															
	0-1452665-1	B			-	0.35				(5)															
					22	-																			
	0-1452668-3	C	0.5-0.75	1.4-1.9	20	0.5				(7)	2	2.0	2.1	1.1	4.2	4.3	2.7	2.6	2.0	6.4	0.8	16			
	0-1452668-2	C			-	0.75				(6)															
	0-1452668-1	C								(5)															
	0-1452671-3	B	1-1.5	1.9-2.4	18	-				(7)	3	2.6	2.9	1.35	4.4	4.3	2.9	3.0	2.0	6.8	0.8	16.55			
	0-1452671-2	B			-	1				(6)															
	0-1452671-1	B			16	-				(5)															
					-	1.5																			
STANDARD APPLICATION Standardanwendung	0-1452653-3	B	0.25-0.35	1.1-1.75	-	0.25				(7)	2	1.8	1.8	0.8	2.6	2.6	1.4	2.6	2.0	5.7	0.2	15			
	0-1452653-2	B			24	-				(6)															
	0-1452653-1	B			-	0.35				(5)															
					22	-																			
	0-1452656-3	C	0.5-0.75	1.4-1.9	20	0.5				(7)	2	2.0	2.1	1.1	2.7	2.9	1.6	3.0	2.0	6.1	0.2	16			
	0-1452656-2	C			-	0.75				(6)															
	0-1452656-1	C								(5)															
	0-1452659-3	B	1-1.5	1.9-2.4	18	-				(7)	3	2.6	2.9	1.35	3.7	3.9	2.1	3.0	2.0	6.1	0.2	16			
	0-1452659-2	B			-	1				(6)															
	0-1452659-1	B			16	-				(5)															
					-	1.5																			

0- VARIANTS SUPERSEDED BY 7- VARIANTS (SEE TABLE ON TOP) (C7)

NOTES
Bemerkungen

(4) ONLY FOR FLR-WIRE SEE DIN 72551, PART 6 AND AWG WIRE ACCORDING DC-SPEC: MS-8288 ; MS-7889 ; MS-9532
Nur fuer FLR-Leitung nach DIN 72551, Teil 6 und AWG Leitung nach DC-SPEC: MS-8288 ; MS-7889 ; MS-9532

(5) PRE TIN SnAg 1.0 TO 3.0 µm
Vorverzinnt SnAg 1.0 bis 3.0 µm

(6) SPRING GOLD PLATED MIN. 0.8 µm (only contact area)
Kontaktfeder galv. vergoldet min.0.8 µm (nur Kontaktzone)

(7) SPRING SILVER PLATED 2.0 TO 5.0 µm (only contact area)
Kontaktfeder galv. versilbert 2.0 bis 5.0 µm (nur Kontaktzone)

(8) BODY PRE TIN Sn 1.0 TO 3.0 µm
Kontaktkoerper vorverzinnt Sn 1.0 bis 3.0 µm

(9) REINFORCED WIRE ACCORDING TO LV 112-4
Zugverstaerkte Leitung nach LV 112-4

THIS DRAWING IS A CONTROLLED DOCUMENT.	DWN E. Horn 11NOV2011	TE Connectivity	
DIMENSIONS: mm	CHK R. Meier 11NOV2011	NAME MCON 1.2 LL (LOCKING-LANCE)	
TOLERANCES UNLESS OTHERWISE SPECIFIED: 0 PLC ±; 1 PLC ±; 2 PLC ±; 3 PLC ±; 4 PLC ±; ±0.2; ANGLES ±1°	APVD V. Seipel 11NOV2011		
	PRODUCT SPEC 108-18782		
	APPLICATION SPEC 114-18464	SIZE A1 / CAGE CODE 00779 / DRAWING NO C-1452674	RESTRICTED TO -
MATERIAL - -	FINISH - -	WEIGHT -	
		Customer Drawing	SCALE - / SHEET 2 OF 2 / REV C7

4805 (3/11)

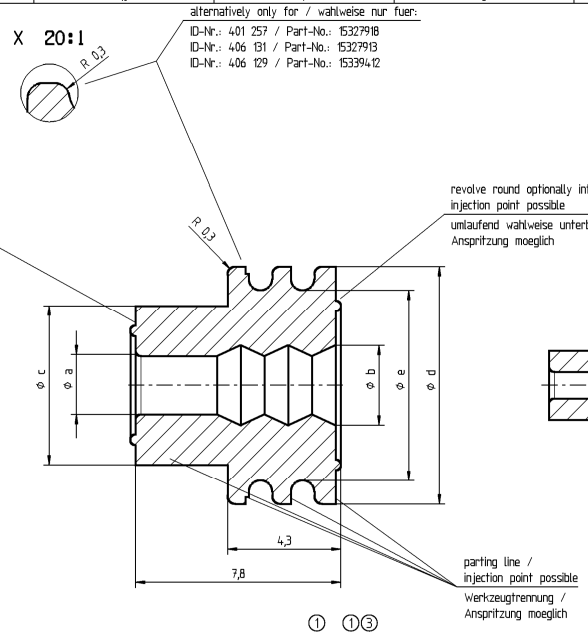

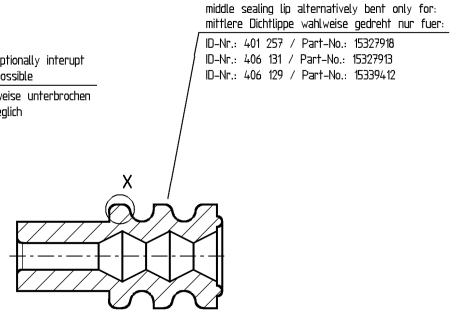

Loose / Lose				Put on the belt / gegurtet				Pos. (1)	Cbl.Ø Ltg.Ø (1)(3)	Cable cross-section mm² altern. Leitungsquerschnitt mm² wahlw.		Color Farbe	SIM RAL	Dimension Ø Mass Ø					
ID-Nr.:	Part-No.:	Part REV	Date Datum	ID-Nr.:	Part-No.:	Part-REV	Date Datum			FLY	FLRY			a±0,1	b±0,2	c±0,2	d±0,1	e +0,1 -0,2	f±0,2
Seal for female-terminal 1,5 mm and tab-terminal 1,5 mm Dichtung fuer Flachsteckhuelse 1,5 mm und Flachstecker 1,5 mm																			
---	33120594	01	310C13	---	---	---	---		0,8-1,2		0,08-0,13	black schwarz	9011	---	---	2,6	3,9	2,6	---
406 131	15327913 (3)	42	13JN00					2	1,2-1,6		0,35-0,5	wine red weinrot	3027	0,8	1,4	2,6	3,9	2,6	---
	15344777 (3)	42	13JN00					13	1,2-1,6		0,35-0,5	yellow gelb	1016	0,8	1,4	2,6	3,9	2,6	---
401 257	15327918	42	13JN00	401 258	15344666	42	13JN00	1	1,2-2,0		0,5-1,0	gray grau	7000	1,0	1,9	2,6	3,9	2,6	---
	15344778 (3)	37	05MY99					12	1,4-2,0		0,5-1,0	green gruen	6010	1,0	1,9	2,6	3,9	2,6	---
406 129	15339412	42	13JN00					3	1,9-2,1 (9)		0,75-1,5 (8)	maize maisgelb	1007	1,5	1,9	2,6	3,9	2,6	---
---	13735535	01	150C08	---	---	01	150C08	21	1,2-2,0		0,5-1,0	yellow gelb	1016	1,0	1,9	2,6	3,9	2,6	---
---	13735527	01	150C08	---	---	01	150C08	22	1,2-2,0		0,5-1,0	green gruen	6010	1,0	1,9	2,6	3,9	2,6	---
Seal for female-terminal 2,8 mm and tab-terminal 2,8 mm Dichtung fuer Flachksteckhuelse 2,8 mm und Flachstecker 2,8 mm																			
---	33120598	01	310C13	---	---	---	---		0,8-1,2		0,08-0,13	wine red weinrot	3027	---	---	3,4	5,65	4,5	---
401 199	15327860	42	13JN00	401 198	10718144	42	13JN00	4	1,2-2,0	0,35	0,35-1,0	blue blau	5010	0,8	1,6	3,4	5,65	4,5	---
	15498732	01	250C04					15	1,2-2,0	0,35	0,35-1,0	gray grau	7000	0,8	1,6	3,4	5,65	4,5	---
404 924	10720901	01	11MY04					14	1,2-2,0	0,35	0,35-1,0	orange orange	2004	0,8	1,6	3,4	5,65	4,5	---
401 187	15327863	42	13JN00	401 188	15344643	42	13JN00	5	2,0-2,7	0,5-1,0	1,5	red / brown rot / braun	3011	1,6	2,2	3,4	5,65	4,5	---
401 259	15327859	42	13JN00	401 260	10720641	42	13JN00	6	2,7-3 (9)	1,5	2,5	maize maisgelb	1007	2,2	3,0	3,4	5,65	4,5	---
Seal for female-terminal 4,8 mm and tab-terminal 4,8 mm Dichtung fuer Flachsteckhuelse 4,8 mm und Flachstecker 4,8 mm																			
401 201	15363779	42	13JN00	401 200	15344644	42	13JN00	7	1,2-2,0	0,35	0,35-1,0	yellow gelb	1016	0,8	1,6	6,0	9,0	7,2	3,4
401 203	15363604	42	13JN00	401 202	15344645	42	13JN00	8	2,0-2,7	0,5-1,0	1,5	white weiss	9010	1,6	2,2	6,0	9,0	7,2	3,7
401 205	15327864	42	13JN00	401 204	15337204	42	13JN00	9	2,7-3,8	1,5-2,5	2,5 - 4,0	red / brown rot / braun	3011	2,2	3,0	6,0	9,0	7,2	4,1
401 208	15363605	42	13JN00	401 207	15344646	42	13JN00	10	4,0-4,5	4,0		green gruen	6010	3,2	3,9	6,0	9,0	7,2	4,6
401 210	15344647	42	13JN00	401 209	15344104	42	13JN00	11	4,7-5,3	6,0		gray grau	7000	3,8	4,8	6,5	9,0	7,2	5,15
---	13735454	01	150C08	---	---	01	150C08	19	2,7-3,8	1,5-2,5	2,5 - 4.0	blue blau	5010	2,2	3,0	6,0	9,0	7,2	4,1
---	13735480	01	150C08	---	---	01	150C08	20	2,7-3,8	1,5-2,5	2,5 - 4.0	green gruen	6010	2,2	3,0	6,0	9,0	7,2	4,1

PART-NO.
33120594
33120598

INNER-CONTURE
INNERE KONTUR

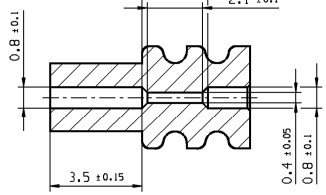

Zone	DWG Status REV	N/P	CHG	Revision history	Date	Name	Check	St. CHK
	01			Initial release Freigabe	16JN00	U.Tor.	J.Moch	R.Wis.
D12	01	AA		ID-Nr.: 607 960 and Part-No.: 10721074 deleted ID-Nr.: 607 960 und Part-No.: 10721074 entfernt	05DE02	Frimm	Cvasa	R.Wis.
C12	01	AB		ID-Nr.: 608 447 and Part-No.: 10763474 deleted ID-Nr.: 608 447 und Part-No.: 10763474 entfernt	05DE02	Frimm	Cvasa	R.Wis.
B12	01	AC		Cable Ø 2,8-3,8 was 2,7-2,9 Leitungs Ø 2,8-3,8 war 2,7-2,9	05DE02	Frimm	Cvasa	R.Wis.
C9	01	AD		Cable Ø 1,7-2,1 was 1,9-2,1 Leitungs Ø 1,7-2,1 war 1,9-2,1	17DE03	Frimm	Cvasa	R.Wis.
C11	02		---	Part-No.: 10720901 added Part-No.: 10720901 hinzu	11MY04	Frimm	Cvasa	R.Wis.
C11	03		---	Part-No.: 15498732 added Part-No.: 15498732 hinzu	25OC04	Frimm	Cvasa	R.Wis.
C9	03	AA		Cable Ø 1,9-2,1 was 1,7-2,1 Leitungs Ø 1,9-2,1 war 1,7-2,1				
C/D11		AB		Part-REV / Date corrected Part-REV / Datum korrigiert	24MY05	Frimm	Cvasa	R.Wis.
C/D11	03	AC		Part-No. 15327918, Rev 42, 13JN00 was 33, 12JN97 Part-No. 15327918, Rev 42, 13JN00 war 33, 12JN97	23AU05	Frimm	Cvasa	R.Wis.
D6-12	04		---	Part-No. 15544651, 15544652 added Part-No. 15544651, 15544652 hinzu				
B4		AA		Remark No. 1 added Bemerkung Nr. 1 hinzu	30SE05	Frimm	Cvasa	R.Wis.
D6-12	05		---	Part-No. 15386644 added Part-No. 15386644 hinzu	16MY06	Frimm	Cvasa	R.Wis.
C7	06		---	Green was violet (Part-No. 15386644) Gruen war violett (Part-No. 15386644)	27JL06	Frimm	Cvasa	R.Wis.
A9	06	AA		Chl.Ø 2,8-3,8 was 2,8-2,9 (Part-No. 15327864) Ltg.Ø 2,8-3,8 war 2,8-2,9 (Part-No. 15327864)	06OC06	Frimm	Cvasa	R.Wis.
A9	06	AB		2,5-4,0 was 2,5 (Part-No. 15327864) 2,5-4,0 war 2,5 (Part-Nr. 15327864)	08NO06	Frimm	Cvasa	R.Wis.
A-D9	06	AC		Pos.-Numbering changed according to D-drawing Pos.-Nummerierung an D-Zeichnung angepasst	26JA07	Frimm	Cvasa	P.Les.
C-A6	07		---	Part 13735454, 13735480, 13735535, 13735527 Added Teile 13735454, 13735480, 13735535, 13735527 hinzu	15OC08	W.Szo	Frimm	K.Pit
D12	08		---	Part-No.: 15544651, 15544652, 15386644 deleted Teile-Nr.: 15544651, 15544652, 15386644 entfernt	09DE09	V.Kas	J.Sat	SYS
C8	08	AA		Cable cross section for Part-No.15339412 changed Leitungsquerschnitt fuer Teile-Nr.15339412 geaendert	01OC13	K.Wir.	T.Plin.	SYS
E12	09			Part 33120594 and 33120598 added Teile 33120594 und 33120598 hinzu	31OC13	A.KHG	A.URB	SYS
F8	09	AA		DIM 1.6 REMOVED MASS 1.6 ENTFERNT	30JN14	A.KHG	A.URB	SYS
	09	AB		DPN's corrected in BOM DPN's korrigiert in Stuckliste	30AP15	V.KAS	K.STO	SYS
	09	AC		RAL 1007 WAS RAL 1006 (WRITING ERROR) RAL 1007 WAR RAL 1006 (SCHREIBFEHLER)	28JN16	V.KAS	K.STO	SYS
E7	09	AD		SIM RAL ADDED/HINZU	13JL16	R.MOL	V.KAS	SYS
F11	09	AE		POSITIONS 19 AND 20 ADDED / POSITIONEN 19 UND 20 HINZU	10AU16	P.SCH	E.OSW	SYS
C8	09	AF		CABLE DIAMETER CHANGED - WRITING ERROR KABELDURCHMESSER GEAENDERT - SCHREIBFEHLER	09JA17	P.SCH	V.KAS	SYS
A-B6	09	AG		CABLE DIAM. FROM MIN. 2,8 TO 2,7 CORRECTED KABELDURCHM. VON MIN. 2,8 ZU 2,7 KORRIGIERT	20JL17	V.KAS	T.BOL	SYS
B9	09	AH		CABLE DIAM. FROM MAX. 2,9 TO 3 CORRECTED KABELDURCHM. VON MAX 2,9 ZU 3 KORRIGIERT	05OC18	T.MAZ	V.KAS	SYS

Bemerkung

Scale/Maessstab 1:1

Scale/Maessstab 5:1

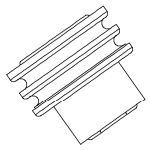

Remarks :

- Material: Silicone, self-lubricated,
  Tensile strenght: Rm min. 6,2 Nm/mm²
  Gap agumentation > 375% DIN 53 504 S2
  ozoneresistant, heatresistant -40 to +180°C
  gauged on testboard

Bemerkungen :

- Werkstoff: Silikon, selbstschmierend,
  Zugfestigkeit: Rm min. 6,2 Nm/mm²
  Reissdehnung > 375% DIN 53 504-S2
  ozonbestaendig, temperaturbestaendig -40 bis +180°C
  gemessen an Pruefplatten

DIM TO CHECK PRUEFMASSE	DIMENSIONAL RANGE (MM) NENNMASSBEREICH (MM)			
( ) DIM FOR HELP HILFSMASSE	FROM TO	0 25	>25 60	>60 80	>80
	TOLERANCE UNLESS OTHERWISE SPECIFIED ALLGEMEINTOLERANZEN			
THEORETIC DIM THEORE. MASSE	±0.3	±0.5	±0.6	±0.75
	ANGULAR TOLERANCE ± 2° WINKELTOLERANZ ± 2°			

Copying of this document, and giving it to others and the use or communication of the contents thereof, are forbidden without express authority. Offenders are liable to the payment of damages. All rights are reserved in the event of the grant of a patent or the registration of a utility model or design. Weitergabe sowie Vervielfältigung dieser Unterlage, Verwertung und Mitteilung ihres Inhaltes ist nicht gestattet, soweit nicht ausdrücklich zugestanden. Zuwiderhandlungen verpflichten zu Schadensersatz. Alle Rechte für den Fall der Patenterteilung oder Gebrauchsmuster-Eintragung vorbehalten.

CAD UNIGRAPHICS

DELPHI
D - 42119 WUPPERTAL

	Date/Datum	Name
Drawn by Bearb.	16JN00	U/Tor.
Checked by Gepr.	06JL00	J.Moch
Standard chk Norm ger.	11JL00	R.Wis.

Part No. Teil Nr.: see chart / siehe Tabelle

Material Werkstoff: see drawing/siehe Zeichnung

Dimensions without tolerance ± 0,2 ∢ ± 2°

Masse ohne Toleranzangabe ± 0,2 ∢ ± 2°

Projection/Projektion

Title/Benennung: **Cable seal**
Einzeldrahtdichtung

Scale/Maßstab 10:1 (1:1 ; 5:1)

Drawing-No. Zeichnungs-Nr. 6501.713/003.__.__

Place Teil - from Blatt - von

Status D

Erstellung der Originalzeichnung / Original design:

Drawing - No.: 15446589

Format: A1

DELPHI

CONTROLLED DOCUMENTS ARE ONLY AVAILABLE ON THE SERVER

Date: 10-Oct-18 Time: 08:49
Dwg: 15446589-G0553-S01
Mapscript: