SCHEDA TECNICA

M 1418994-1

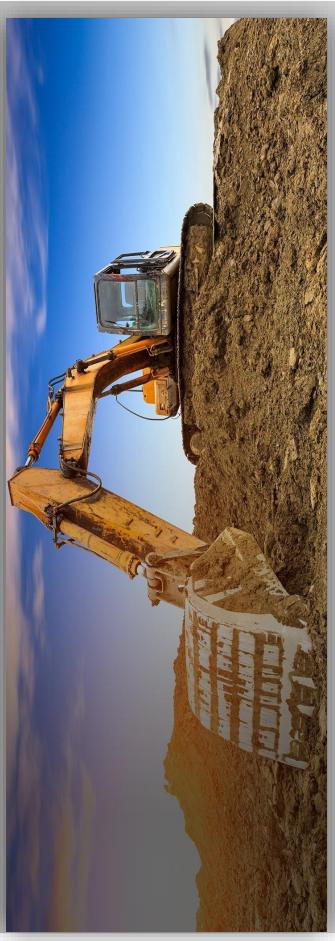

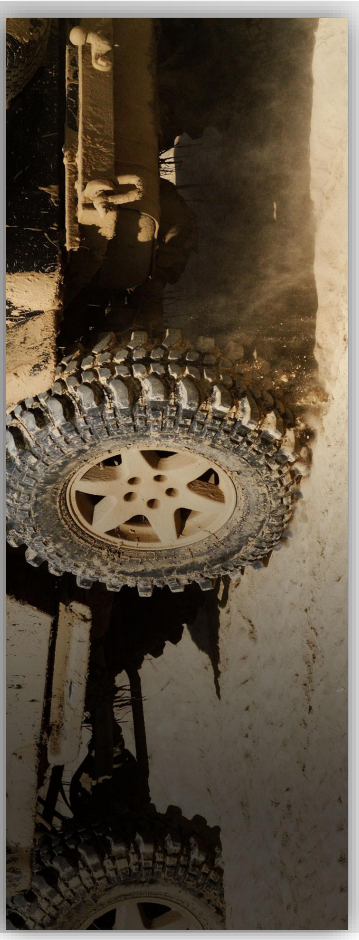

mes connettori
componenti per il cablaggio

THIS DRAWING IS UNPUBLISHED. RELEASED FOR PUBLICATION 2000
© COPYRIGHT 2000 BY TYCO ELECTRONICS CORPORATION. ALL INTERNATIONAL RIGHTS RESERVED.

LOC	DIST
E	B

REVISIONS

P	LTR	DESCRIPTION	DATE	DWN	APVD
	D	ECR-08-004059	12FEB2008	MJH	RB
	D1	ECR-09-025091	16NOV2009	ABS	MH
	E	ECR-10-026137	21DEC2010	ABS	MH

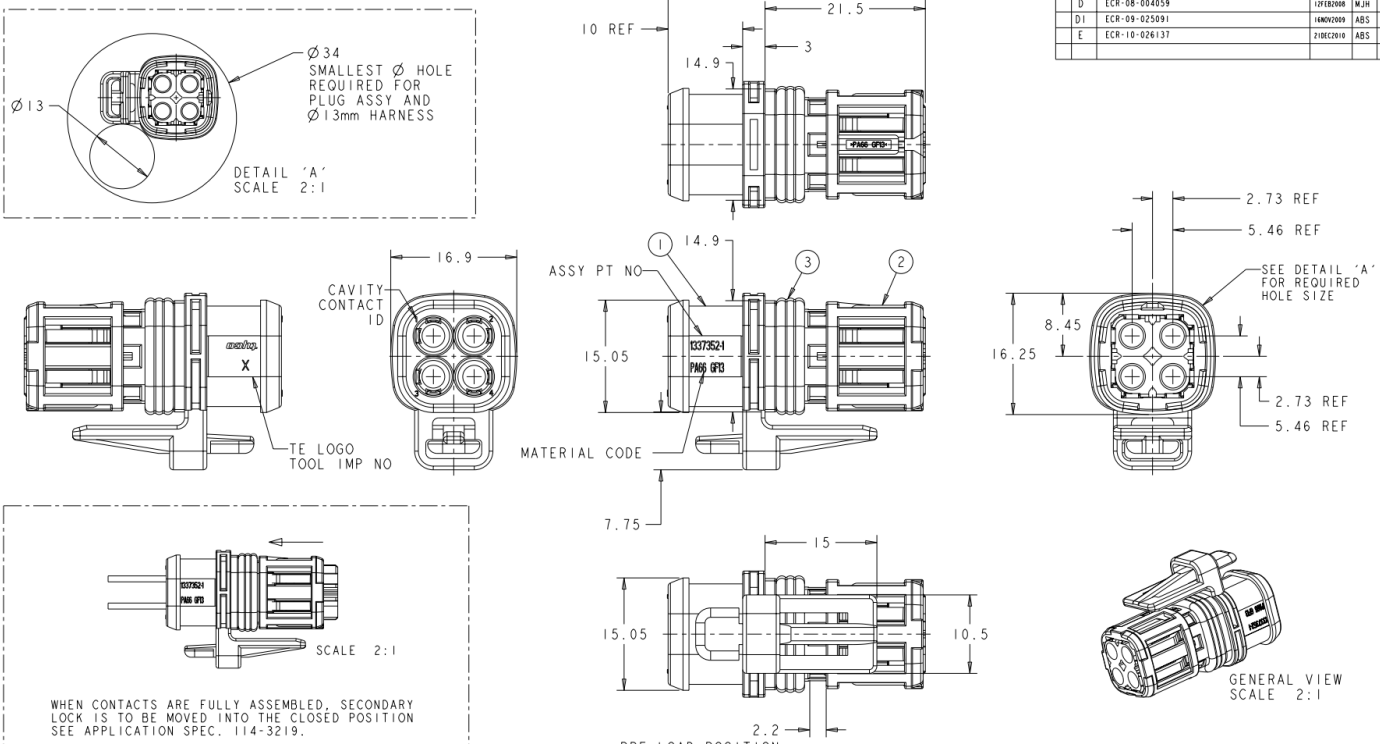

NOTES:

1 FOR USE WITH CONTACT SYSTEM Ø1.5MM SOCKET:

929988-X
929989-X
929990-X

REFER TO CONTACT APPLICATION SPECIFICATION 114-18040-1 FOR WIRE SIZE & INSULATION DIAMETER SIZE DETAILS.

2 MATING INTERFACE DETAILS: 114-3226

COLOUR	MATERIAL	QTY.	DESCRIPTION	ITEM	ASSEMBLY P/N
GREEN	FLOURO-CARBON VF544-70 (WITH SILICONE COATING)	1	PERIPHERAL SEAL	3	1337352-1
RED	13% G.F. NYLON	1	SEAL RETAINER / SECONDARY LOCK	2	
BLACK	13% G.F. NYLON	1	4-WAY RECEPTALCE CONN. HSG.	1	

"ELECTRONICS" IS CONTROLLED DOCUMENT FROM TYCO ELECTRONICS CORPORATION IT IS GOVERNED BY ELECTRONICS CORPORATION DOCUMENTATION SHOULD BE CONTACTED FOR THEIR LATEST REVISION

DIMENSIONS: mm

TOLERANCES UNLESS OTHERWISE SPECIFIED:
LINEAR ±0.5
0 PLC ±-
1 PLC ±-
2 PLC ±-
3 PLC ±-
4 PLC ±-
ANGLES ±0.5
FINISH

MATERIAL: SEE TABLE

N/A

DWN: ED SCOTT 12SEP2000
CHK: R CHALLIS 14SEP2000
APVD: M WHELAN 14SEP2000
PRODUCT SPEC: 108-3442
APPLICATION SPEC: 114-3219
WEIGHT: -

CUSTOMER DRAWING

Tyco Electronics UK Ltd.
Stanmore, Middlesex, HA7 4RS.

NAME: 4-WAY RECEPTACLE PLUG CONNECTOR (DIA 1.5mm CONTACT SYSTEM)
-

SIZE: A2 | CAGE CODE: 00779 | DRAWING NO: C-1337352 | RESTRICTED TO: -

SCALE 3:1 | SHEET 1 OF 1 | REV E