SCHEDA TECNICA

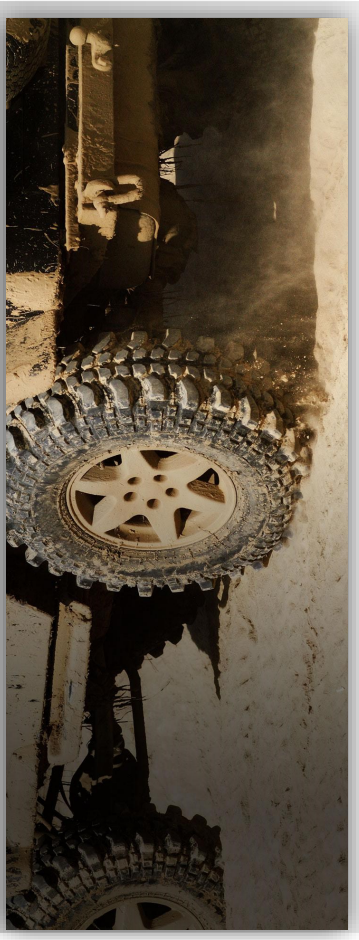

mes connettori
componenti per il cablaggio

M 776286-1

THIS DRAWING IS UNPUBLISHED. RELEASED FOR PUBLICATION 2015
© COPYRIGHT 20 BY - ALL RIGHTS RESERVED.

REVISIONS

P	LTR	DESCRIPTION	DATE	DRN	APVD
	C	REVISED PER ECO-15-017333	29DEC2015	DD	DS
	D	REVISED PER ECO-16-006990	16NOV2016	DD	DS
	D1	REVISED PER ECO-17-007878	31MAY2017	JM	DS
	E	REVISED PER ECO-18-019884	19DEC2018	DS	DS

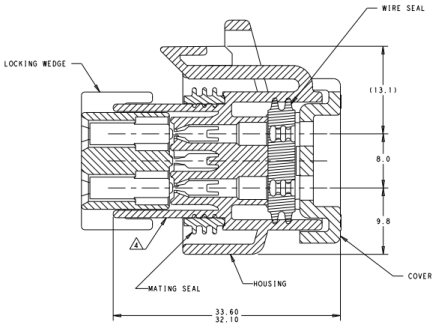

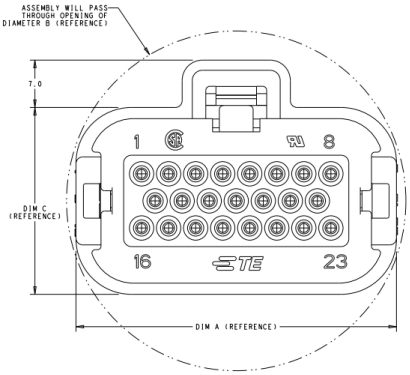

23-POSITION CONNECTOR SHOWN, SEE TABLE BELOW FOR ALTERNATE DIMENSIONS.

CONNECTOR SIZE	A	B	C
8-POSITION	27.4	40	27.50
14-POSITION	35.4	44	27.60
23-POSITION	47.4	50	27.60
35-POSITION	63.4	66	27.45

1. MATERIAL: HOUSING - UL94V-0 PBT
   LOCKING WEDGE - UL94V-0 PBT, RED
   COVER - UL94V-0 PBT, BLACK
   MATING SEAL - SILICONE
   WIRE SEAL - SILICONE
2. HOUSING COLORS ARE MECHANICALLY KEYED TO MATE WITH IDENTICALLY COLORED HEADER ASSEMBLIES.
3. PLUG USES REELED TERMINAL 770520 OR LOOSE PIECE TERMINAL 770854.

4. DATE CODE ON THIS SURFACE. USES 5 DIGIT CODE: FIRST 2 DIGITS = YEAR, SECOND 2 DIGITS = WEEK, LAST DIGIT = DAY.

5. CIRCUITS 3, 7, 16, 17, 21, 22 BLOCKED

6. OPTIONAL VOID CORING ON 35 POSITION PLUG ASSEMBLY 776164.

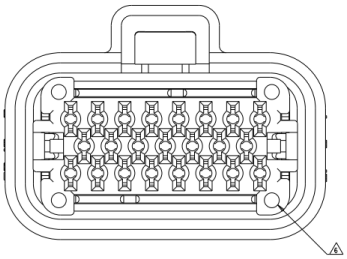

BOTTOM VIEW WITH LOCKING WEDGE

MATING HEADER						
VERTICAL	RIGHT-ANGLE	WIRE SEAL COLOR	MATING SEAL COLOR	HOUSING COLOR	NO. OF POSITIONS	PART NUMBER
776230, 776231	776180, 776163	RED	RED	ORANGE	35-POSITION	776164-6
				BLUE		776164-5
				GREY		776164-4
				NATURAL		776164-2
				BLACK		776164-1
776200, 776228	770669, 776087	GREEN	RED	BLUE	23-POSITION	770680-5
				GREY		770680-4
				BLACK		5 770680-3
				NATURAL		770680-2
				BLACK		770680-1
776261, 776262	776266, 776267	GREEN	GREEN	BLUE	14-POSITION	776273-5
				GREY		776273-4
				NATURAL		776273-2
				BLACK		776273-1
776275, 776276	776279, 776280	YELLOW	YELLOW	NATURAL	8-POSITION	776286-2
				BLACK		776286-1

THIS DRAWING IS A CONTROLLED DOCUMENT.

DIMENSIONS: mm

TOLERANCES UNLESS OTHERWISE SPECIFIED: 4 PLC ±- / 3 PLC ±0.2 / 2 PLC ±1- / 1 PLC ±0- / ANGLES ±-

MATERIAL: SEE NOTE 1

FINISH: -

DR. M. MARTIN 11JUN2015
CH. D. STRAUSSER 29JUN2015
APP. DRAWING RELEASE 29JUN2015

PRODUCT SPEC 108-1329
APPLICATION SPEC 114-18016
WEIGHT: -

TE Connectivity

NAME: PLUG ASSEMBLY, AMPSEAL FAMILY DRAWING

SIZE A1 | CAGE CODE 00779 | DRAWING NO C-2293782 | RESTRICTED TO -

CUSTOMER DRAWING | SCALE 4:1 | SHEET 1 OF 2 | REV E