SCHEDA TECNICA

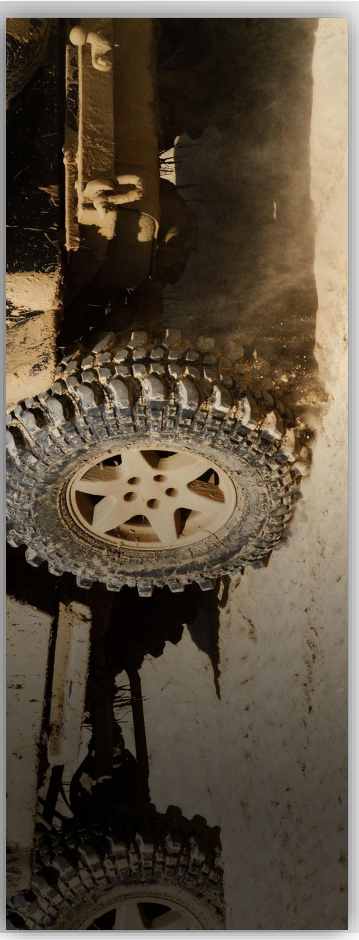

mes connettori
componenti per il cablaggio

M HDP26-18-20S_

REV	
A	HDP26-18-⁂P/S⁂

REVISIONS

SYM	DESCRIPTION	DATE	APPROVED
NC	NEW RELEASE PER E.O. P16488	1-27-88	RDR
A	REVISED PER E.O. P16875	7-29-00	[illegible]

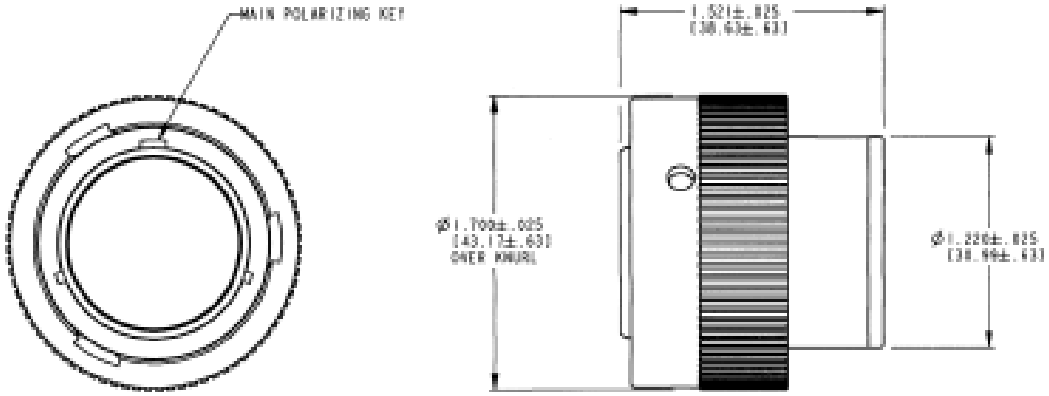

6. THIS PART MATES WITH HDP24-18-44S/P4.
5. FOR ARRANGEMENT OF CONTACT LOCATION SEE ENVELOPE DRAWING 0425-013-1000.
4. FOR CONTACTS AND WIRES PERFORMANCE AND APPLICATION CHARACTERISTICS SEE ENVELOPE DRAWING 0425-015 0000.
3. FOR PERFORMANCE AND APPLICATION CHARACTERISTICS SEE ENVELOPE DRAWING 0425-021-0000.
2. DIMENSIONS ARE IN INCHES [MILLIMETERS].

NOTES: 1. CONSULT FACTORY FOR ELECTRICAL AND MATERIAL SPECIFICATIONS.

	SIGNATURE & DATE
DR	S. BEARD 12/JAN/01
CHK	[illegible]
PE	[illegible]
APPD	[illegible]
SCALE	NONE WT

PLUG CONNECTOR
SHELL SIZE 18
BAYONET COUPLING
HDP20 SERIES

ENVELOPE

CP

The Deutsch Company
DEUTSCH I.P.D.
3850 INDUSTRIAL AVE.
HEMET, CALIF. 92543

B HDP26-18-⁂P/S⁂

CODE IDENT NO. SHEET 1 OF 1